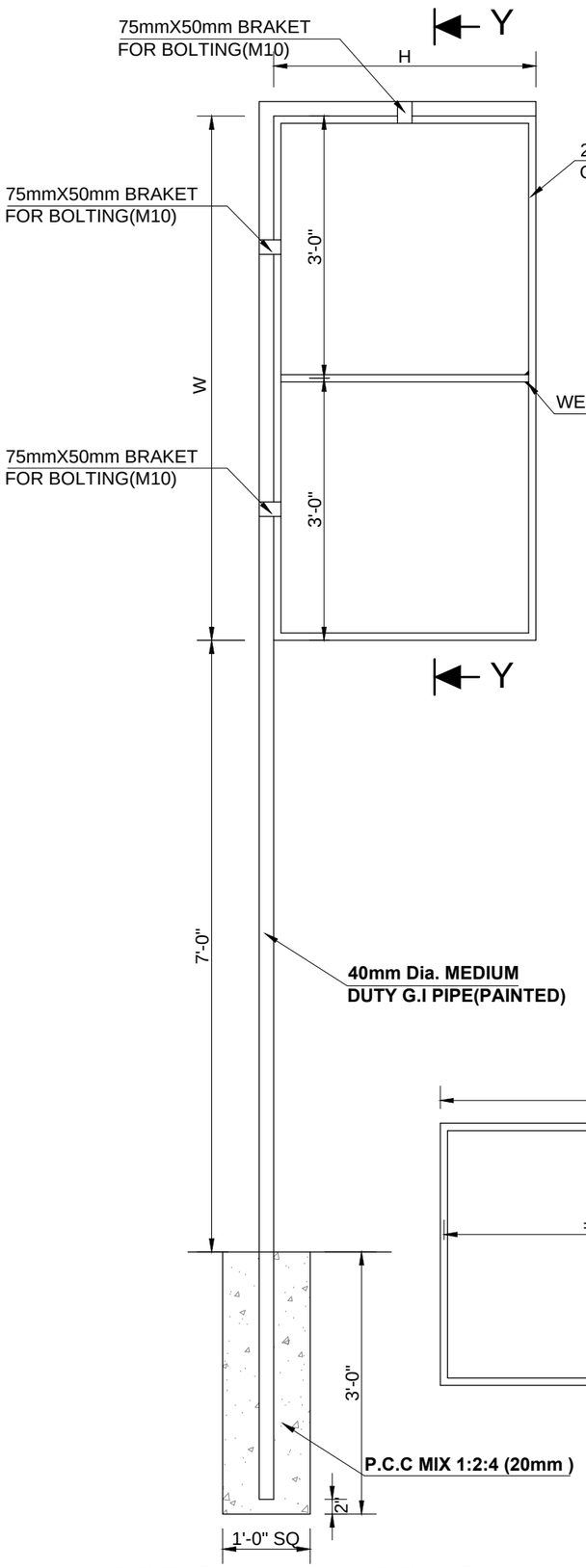

VERTICAL DEALER BOARD

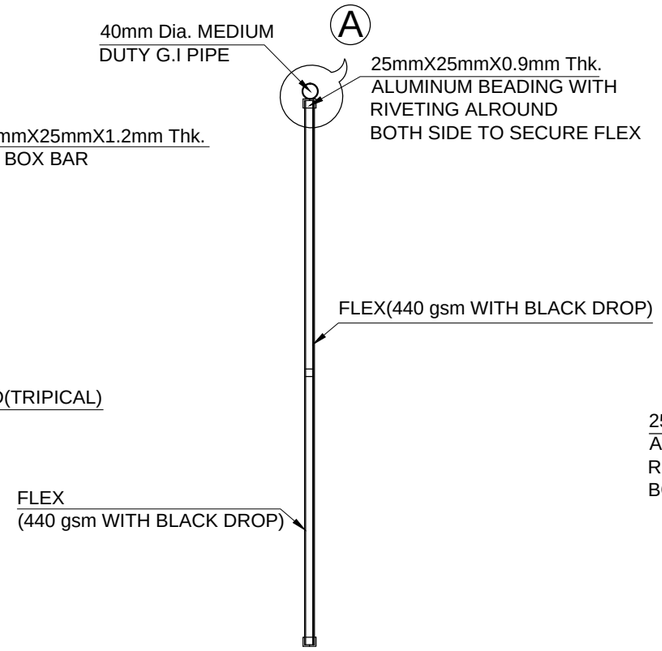

SECTION Y-Y

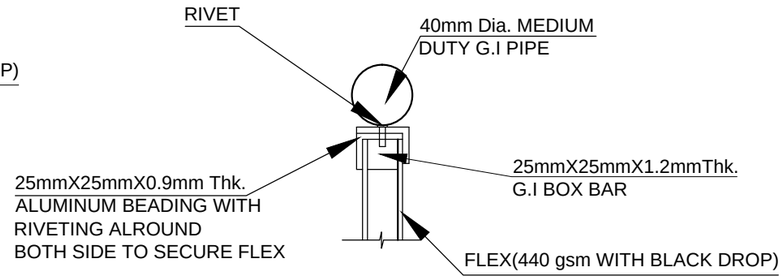

VIEW -A

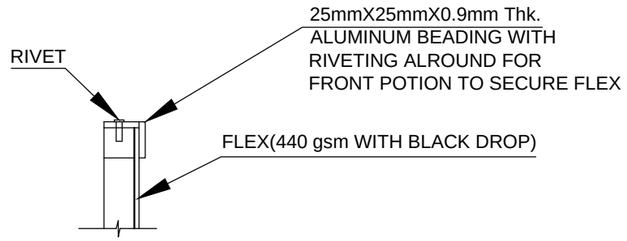

VIEW -B

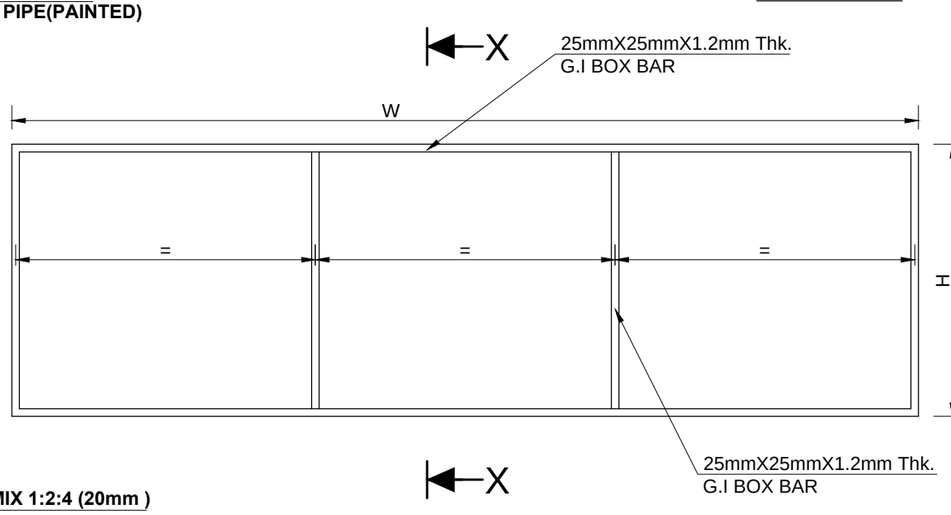

HORIZONTAL DEALER BOARD

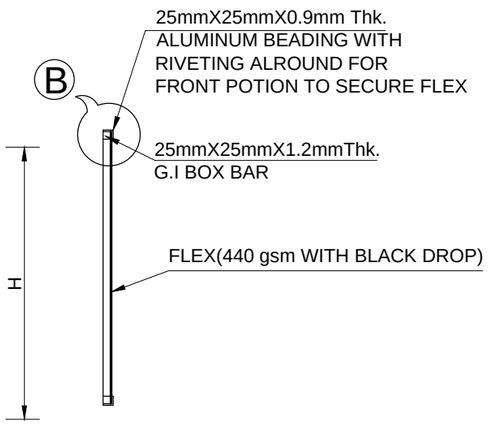

SECTION X-X

SCHEDULE OF DEALER BOARDS

SN.	DESCRIPTION	W	H
1.	DEALER BOARD: 6 FT X 3 FT (DOUBLE SIDE)	6FT	3FT
2.	DEALER BOARD: 8 FT X 3 FT (SINGLE SIDE)	8FT	3FT
3.	DEALER BOARD: 12 FT X 3 FT (SINGLE SIDE)	12FT	3FT
4.	DEALER BOARD: 18 FT X 3 FT (SINGLE SIDE)	18FT	3FT

REV.NO	DESCRIPTION	REV.BY	DATE

LANKA IOC PLC

DRAWING TITLE :

DETAILS OF DEALER BOARD FOR SERVO SHOP

DRAWN BY	:SHANTHA	DATE	: 30-10-2015
DESIGN BY	:RANGANA	CHECKED	:
SCALE	:AS SHOWN	JOB NO.	: LIOC
DRAWING NO.	:LIOC/ENG/SS/1	APPROVED	: FA,VP(E)
CAD FILE	:LANKA IOC		